Mondella

MAESTRO
COLLECTION

CERAMIC DISC SPINDLE SET MATTE BLLACK

1/4 Turn Spindles

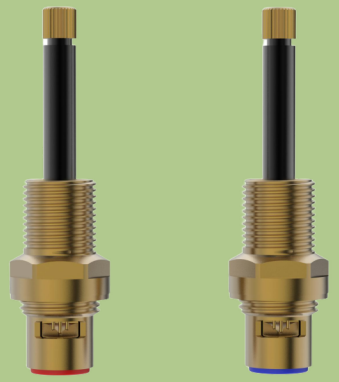

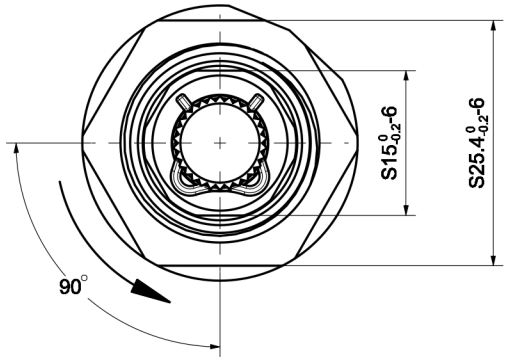

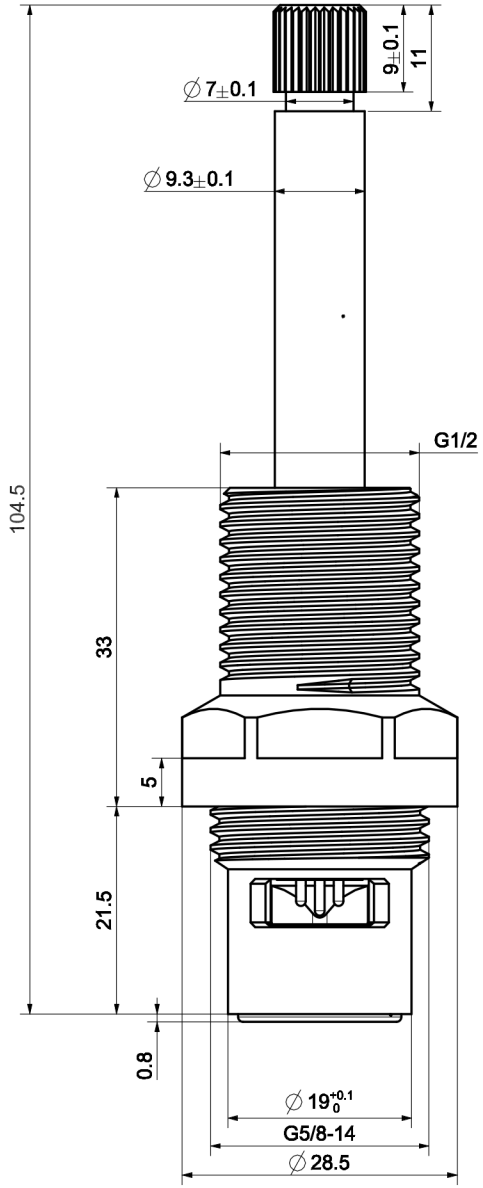

ITEM NO:
0658813

Lead Free

All dimensions in millimetres (mm) and subject to manufacturing tolerances.