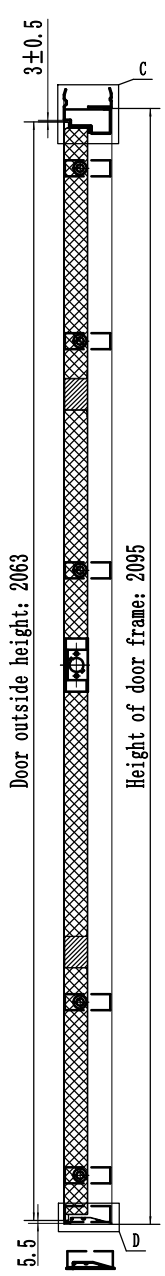
3±0.5
C
Door outside height: 2063
Height of door frame: 2095
5.5
D

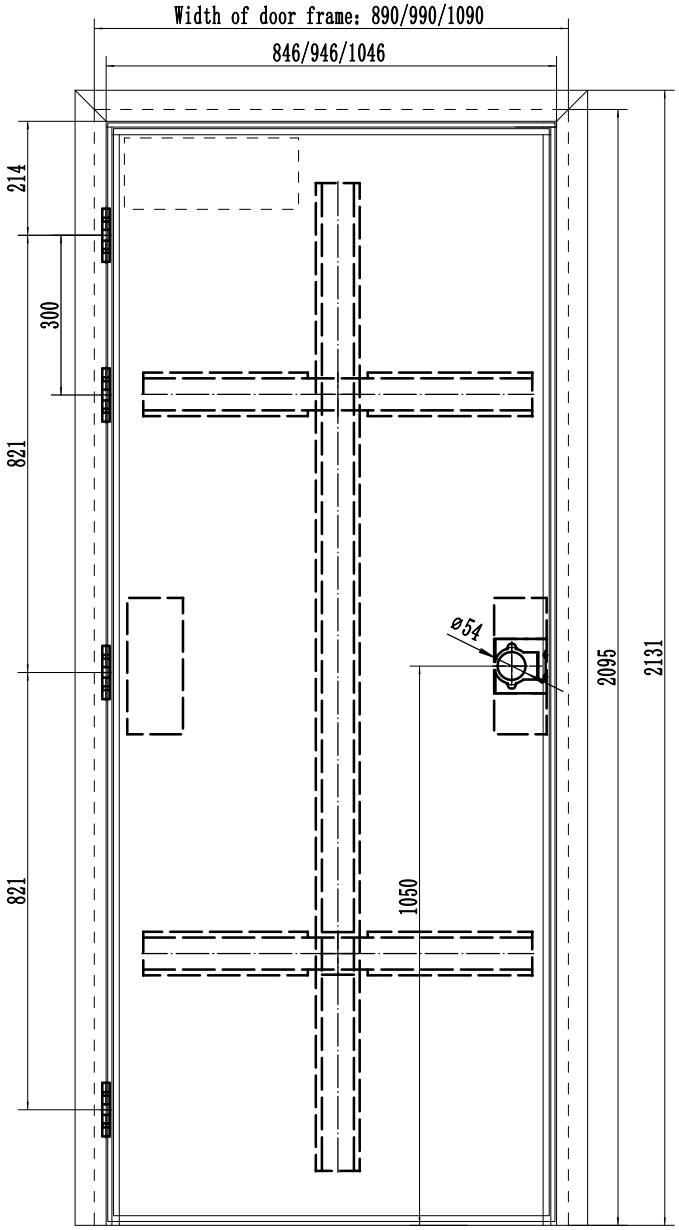
Width of door frame: 890/990/1090
846/946/1046
214
300
821
821
ø54
1050
2095
2131

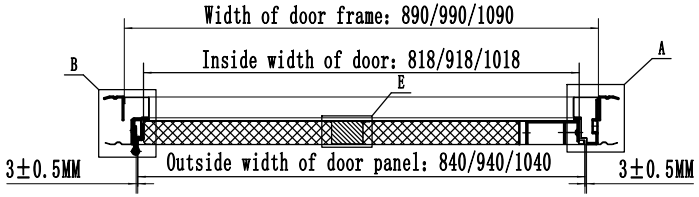
Width of door frame: 890/990/1090
Inside width of door: 818/918/1018
B
A
E
3±0.5MM
Outside width of door panel: 840/940/1040
3±0.5MM

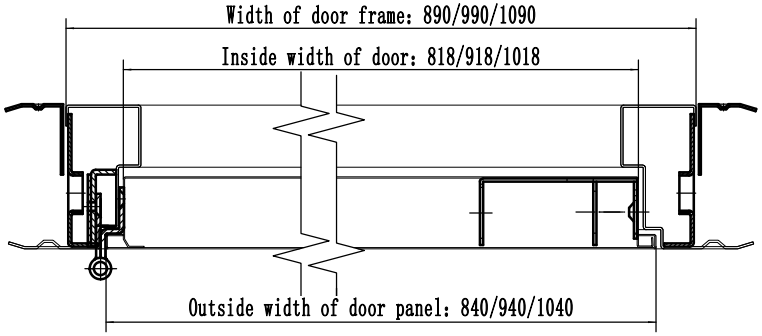
Width of door frame: 890/990/1090
Inside width of door: 818/918/1018
Outside width of door panel: 840/940/1040

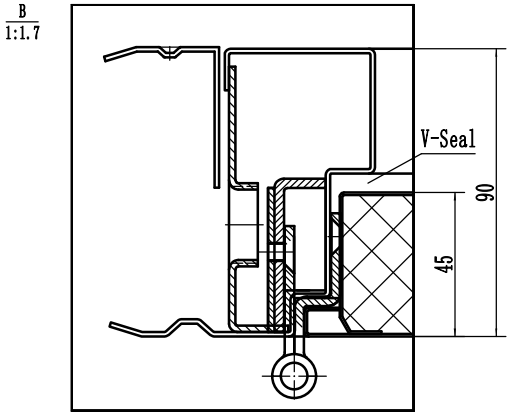
B
1:1.7
V-Seal
90
45

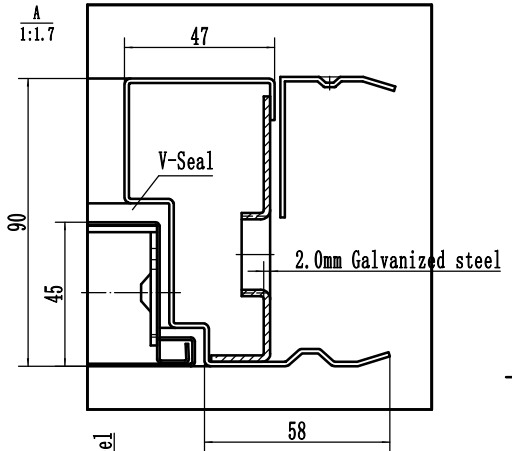
A
1:1.7
47
V-Seal
90
45
2.0mm Galvanized steel
58

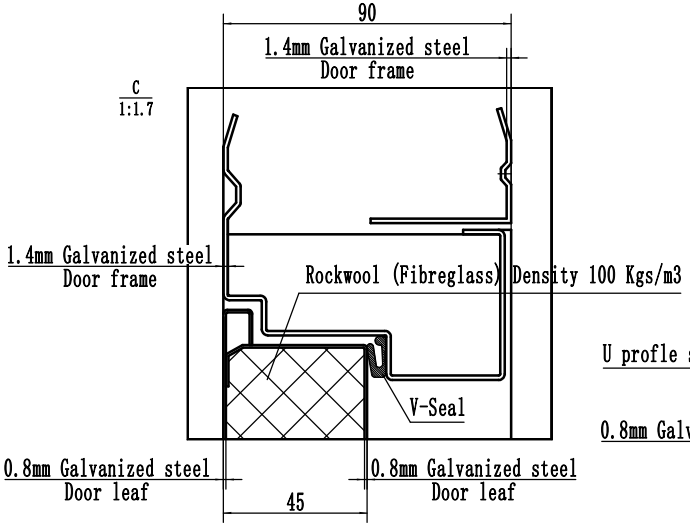
90
1.4mm Galvanized steel
Door frame
C
1:1.7
1.4mm Galvanized steel
Door frame
Rockwool (Fibreglass) Density 100 Kgs/m3
V-Seal
0.8mm Galvanized steel
Door leaf
0.8mm Galvanized steel
Door leaf
45

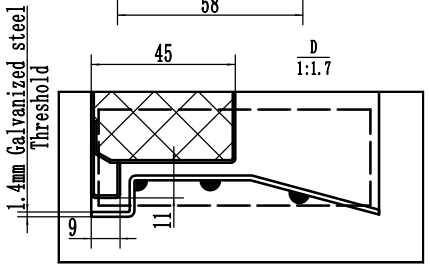
45
D
1:1.7
1.4mm Galvanized steel
Threshold
9
11

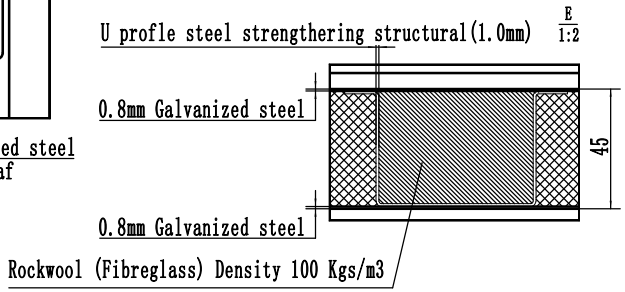
U profle steel strengthering structural(1.0mm)
E
1:2
0.8mm Galvanized steel
45
0.8mm Galvanized steel
Rockwool (Fibreglass) Density 100 Kgs/m3